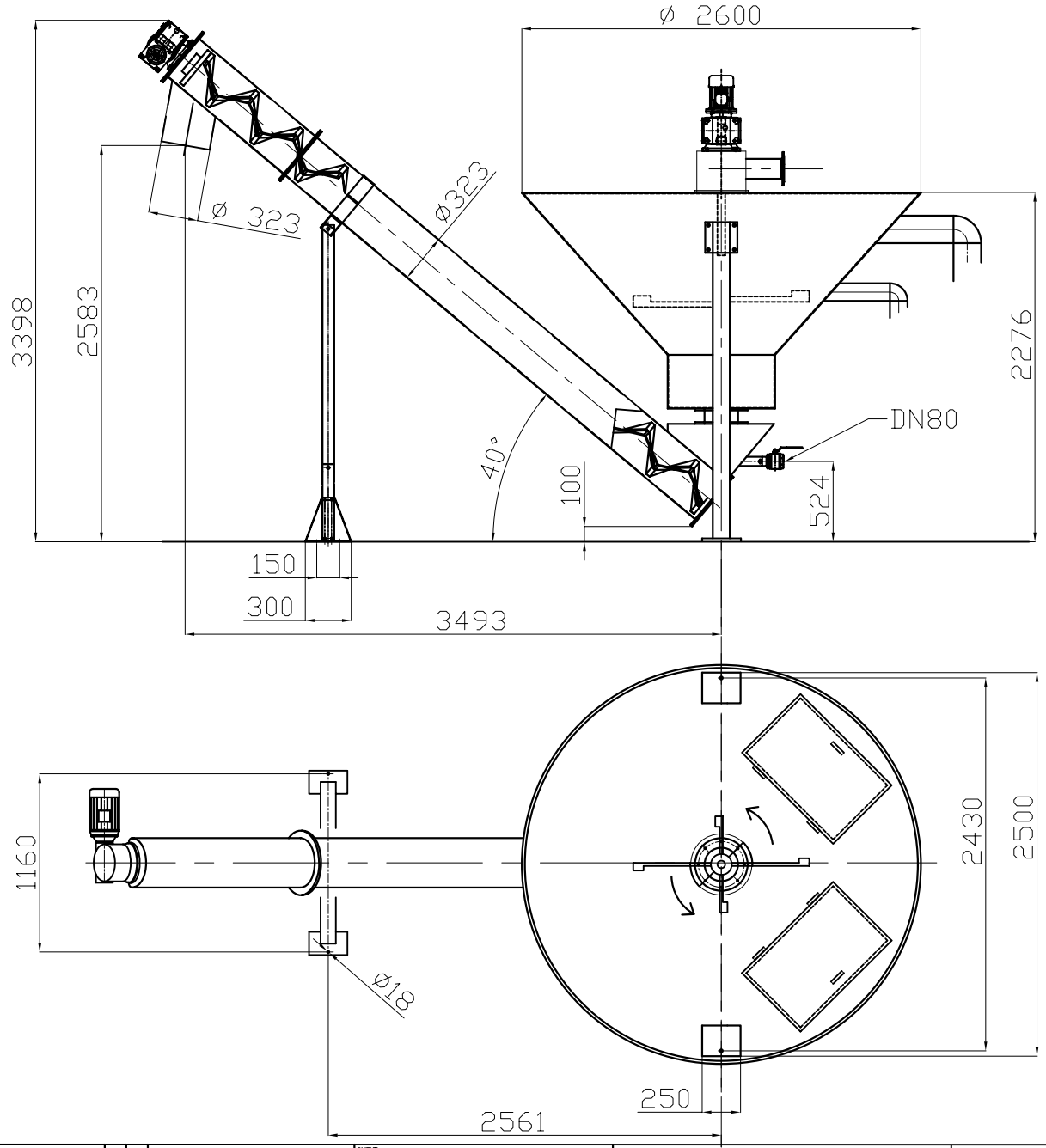

ISSUE	DATE ISSUED	AMMENDMENTS	DRN	CHK

DRAWN : DJ DATE :
DWG No. : GW ISSUE :
SCALE : 1:15
AUTOCAD REF : AutoCAD REF.

CLIENT : GRIT WASHER

JOB TITLE : GW 60

Contra Shear Technology
5 Haughton St, Lilley Point. NSW 2066 Sydney Australia.
Tel. 61 2 9427 1278 Fax 61 2 9427 3354
Mobile 0412 271 279 email : info@cstechnology.com.au

GRIT WASHER
MODEL No. GW 60

ISSUE: 00
DRAWING No.: GW