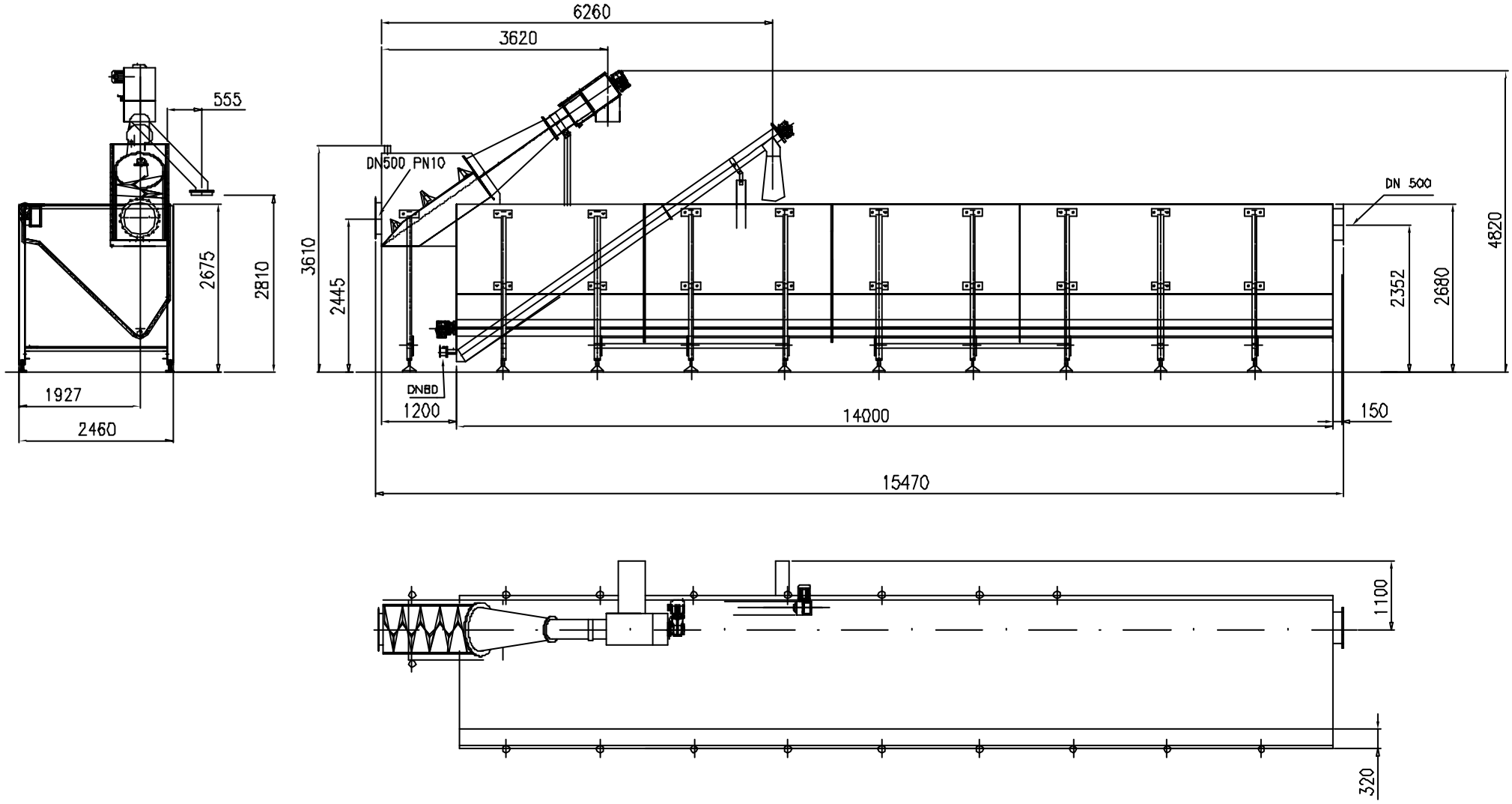

				DRAWN :	N.T.	DATE :	25/08/03
				DWG No. :	STU/C-3/160	ISSUE :	00
				SCALE :	1:1		
				AUTOCAD REF :	STU/C-3/160		
00							
ISSUE	DATE ISSUED	AMENDMENTS	DRN	CHK			

CLIENT :

JOB TITLE :

Contra-Shear Technology

5 Houghton St, Unley Park, NSW 2084 Sydney Australia.
Tel. 61 2 9427 1279 Fax 61 2 9427 3354
Mobile 0412 271 278 email : info@csm.com.au

STU/C-3/160

ISSUE

DRAWING No.

STU/C-3/160